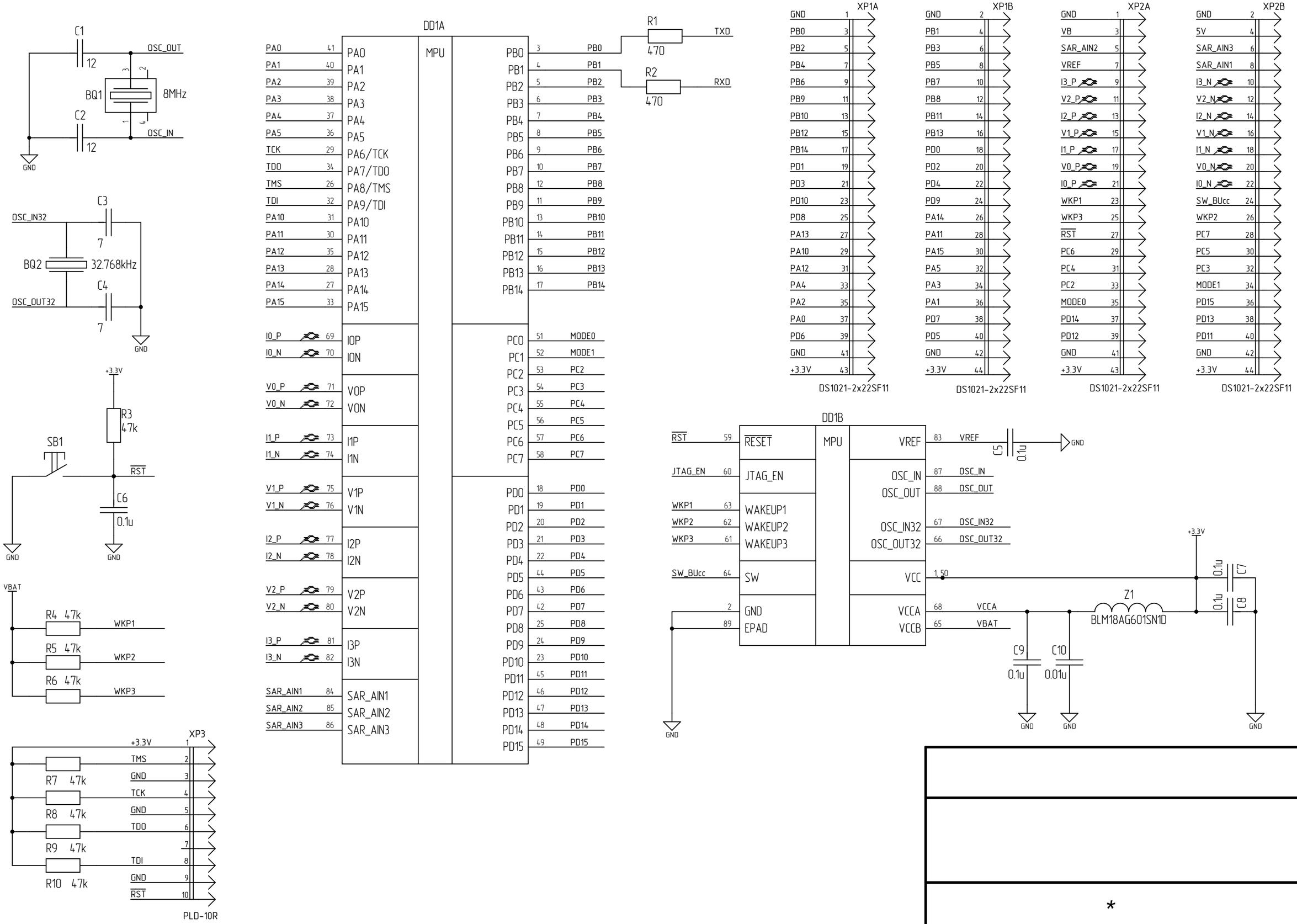
C1
12
OSC_OUT
BQ1
8MHz
C2
12
OSC_IN
GND
C3
OSC_IN32
7
BQ2
32.768kHz
C4
OSC_OUT32
7
GND
+3.3V
R3
47k
SB1
RST
C6
0.1u
GND
GND
VBAT
R4 47k
WKP1
R5 47k
WKP2
R6 47k
WKP3
XP3
+3.3V
R7 47k
TMS
GND
R8 47k
TCK
GND
R9 47k
TDO
R10 47k
TDI
GND
RST
PLD-10R
DD1A
MPU
PA0 41 PA0
PA1 40 PA1
PA2 39 PA2
PA3 38 PA3
PA4 37 PA4
PA5 36 PA5
TCK 29 PA6/TCK
TDO 34 PA7/TDO
TMS 26 PA8/TMS
TDI 32 PA9/TDI
PA10 31 PA10
PA11 30 PA11
PA12 35 PA12
PA13 28 PA13
PA14 27 PA14
PA15 33 PA15
I0_P 69 I0P
I0_N 70 I0N
V0_P 71 V0P
V0_N 72 V0N
I1_P 73 I1P
I1_N 74 I1N
V1_P 75 V1P
V1_N 76 V1N
I2_P 77 I2P
I2_N 78 I2N
V2_P 79 V2P
V2_N 80 V2N
I3_P 81 I3P
I3_N 82 I3N
SAR_AIN1 84 SAR_AIN1
SAR_AIN2 85 SAR_AIN2
SAR_AIN3 86 SAR_AIN3
PB0 3 PB0
PB1 4 PB1
PB2 5 PB2
PB3 6 PB3
PB4 7 PB4
PB5 8 PB5
PB6 9 PB6
PB7 10 PB7
PB8 12 PB8
PB9 11 PB9
PB10 13 PB10
PB11 14 PB11
PB12 15 PB12
PB13 16 PB13
PB14 17 PB14
PC0 51 MODE0
PC1 52 MODE1
PC2 53 PC2
PC3 54 PC3
PC4 55 PC4
PC5 56 PC5
PC6 57 PC6
PC7 58 PC7
PD0 18 PD0
PD1 19 PD1
PD2 20 PD2
PD3 21 PD3
PD4 22 PD4
PD5 44 PD5
PD6 43 PD6
PD7 42 PD7
PD8 25 PD8
PD9 24 PD9
PD10 23 PD10
PD11 45 PD11
PD12 46 PD12
PD13 47 PD13
PD14 48 PD14
PD15 49 PD15
R1
470
TXD
R2
470
RXD
XP1A
GND 1
PB0 3
PB2 5
PB4 7
PB6 9
PB9 11
PB10 13
PB12 15
PB14 17
PD1 19
PD3 21
PD10 23
PD8 25
PA13 27
PA10 29
PA12 31
PA4 33
PA2 35
PA0 37
PD6 39
GND 41
+3.3V 43
DS1021-2x22SF11
XP1B
GND 2
PB1 4
PB3 6
PB5 8
PB7 10
PB8 12
PB11 14
PB13 16
PD0 18
PD2 20
PD4 22
PD9 24
PA14 26
PA11 28
PA15 30
PA5 32
PA3 34
PA1 36
PD7 38
PD5 40
GND 42
+3.3V 44
DS1021-2x22SF11
XP2A
GND 1
VB 3
SAR_AIN2 5
VREF 7
I3_P 9
V2_P 11
I2_P 13
V1_P 15
I1_P 17
V0_P 19
I0_P 21
WKP1 23
WKP3 25
RST 27
PC6 29
PC4 31
PC2 33
MODE0 35
PD14 37
PD12 39
GND 41
+3.3V 43
DS1021-2x22SF11
XP2B
GND 2
5V 4
SAR_AIN3 6
SAR_AIN1 8
I3_N 10
V2_N 12
I2_N 14
V1_N 16
I1_N 18
V0_N 20
I0_N 22
SW_BUcc 24
WKP2 26
PC7 28
PC5 30
PC3 32
MODE1 34
PD15 36
PD13 38
PD11 40
GND 42
+3.3V 44
DS1021-2x22SF11
DD1B
MPU
RST 59 RESET
JTAG_EN 60 JTAG_EN
WKP1 63 WAKEUP1
WKP2 62 WAKEUP2
WKP3 61 WAKEUP3
SW_BUcc 64 SW
2 GND
89 EPAD
VREF 83 VREF
OSC_IN 87 OSC_IN
OSC_OUT 88 OSC_OUT
OSC_IN32 67 OSC_IN32
OSC_OUT32 66 OSC_OUT32
VCC 1, 50
VCCA 68 VCCA
VCCB 65 VBAT
C5
0.1u
GND
+3.3V
0.1u C7
0.1u C8
Z1
BLM18AG601SN1D
C9
0.1u
C10
0.01u
GND
GND
GND
GND
GND

*

Format A3

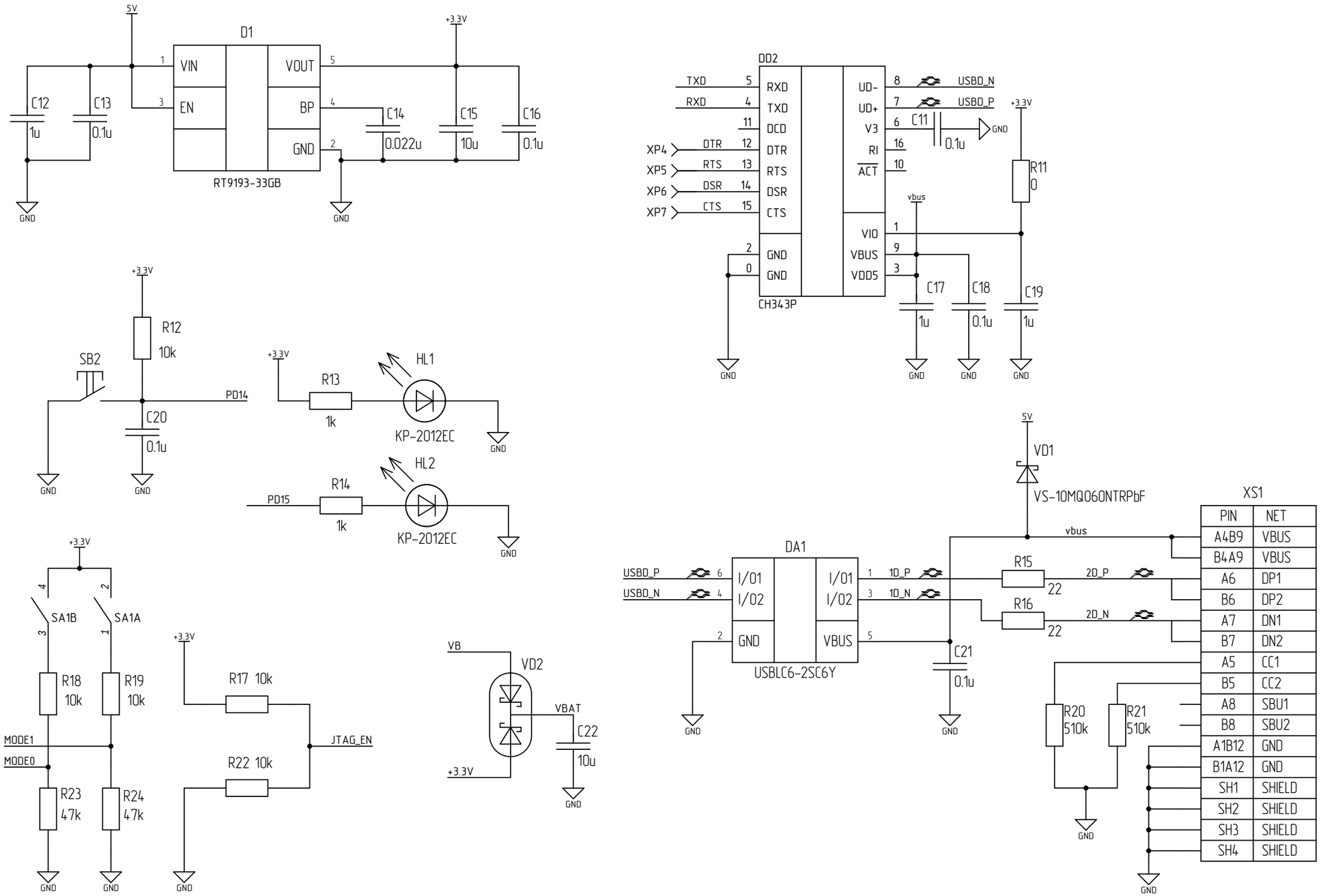
5V
D1
VIN
EN
VOUT
BP
GND
RT9193-33GB
+3.3V
C12
1u
C13
0.1u
C14
0.022u
C15
10u
C16
0.1u
GND
DD2
TXD
RXD
XP4 DTR
XP5 RTS
XP6 DSR
XP7 CTS
RXD
TXD
DCD
DTR
RTS
DSR
CTS
GND
GND
CH343P
UD-
UD+
V3
RI
ACT
VIO
VBUS
VDD5
USBD_N
USBD_P
C11
0.1u
R11
0
vbus
C17
1u
C18
0.1u
C19
1u
R12
10k
SB2
PD14
C20
0.1u
R13
1k
HL1
KP-2012EC
R14
1k
HL2
KP-2012EC
PD15
SA1B
SA1A
R18
10k
R19
10k
MODE1
MODE0
R23
47k
R24
47k
R17 10k
R22 10k
JTAG_EN
VB
VD2
VBAT
C22
10u
VD1
VS-10MQ060NTRPbF
DA1
USBD_P
USBD_N
I/O1
I/O2
GND
VBUS
USBLC6-2SC6Y
1D_P
1D_N
R15
22
R16
22
2D_P
2D_N
C21
0.1u
R20
510k
R21
510k
XS1
PIN NET
A4B9 VBUS
B4A9 VBUS
A6 DP1
B6 DP2
A7 DN1
B7 DN2
A5 CC1
B5 CC2
A8 SBU1
B8 SBU2
A1B12 GND
B1A12 GND
SH1 SHIELD
SH2 SHIELD
SH3 SHIELD
SH4 SHIELD

*

Format A3