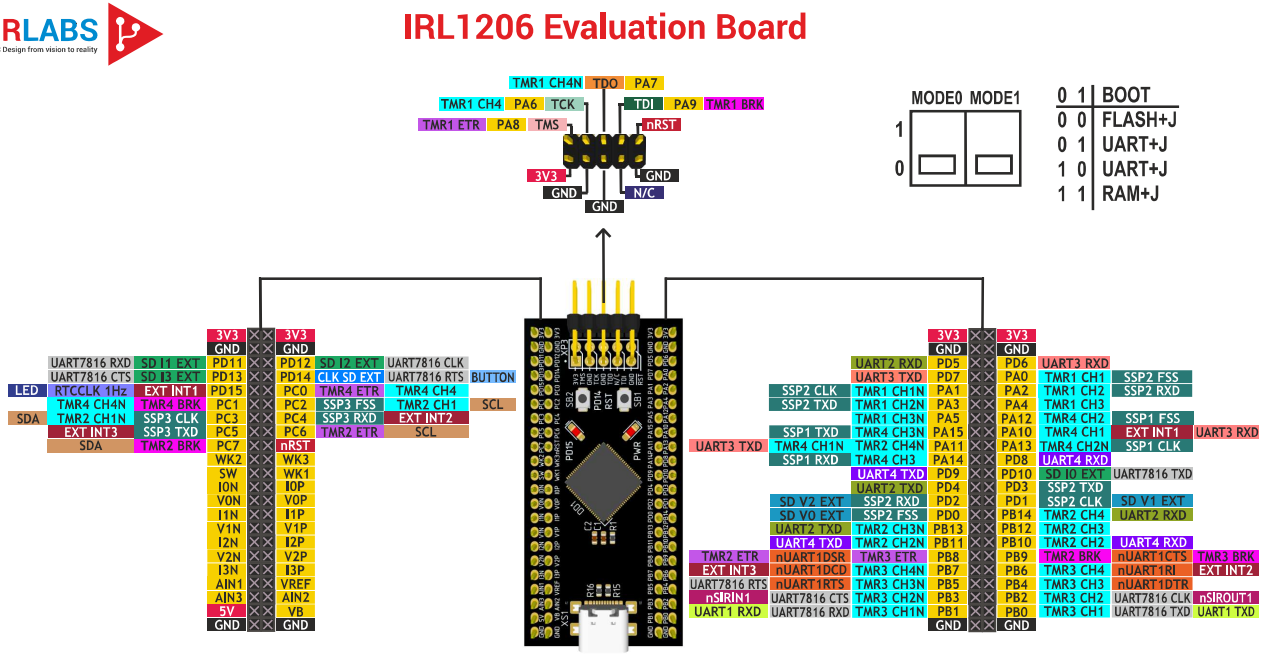IRL1206 Evaluation Board